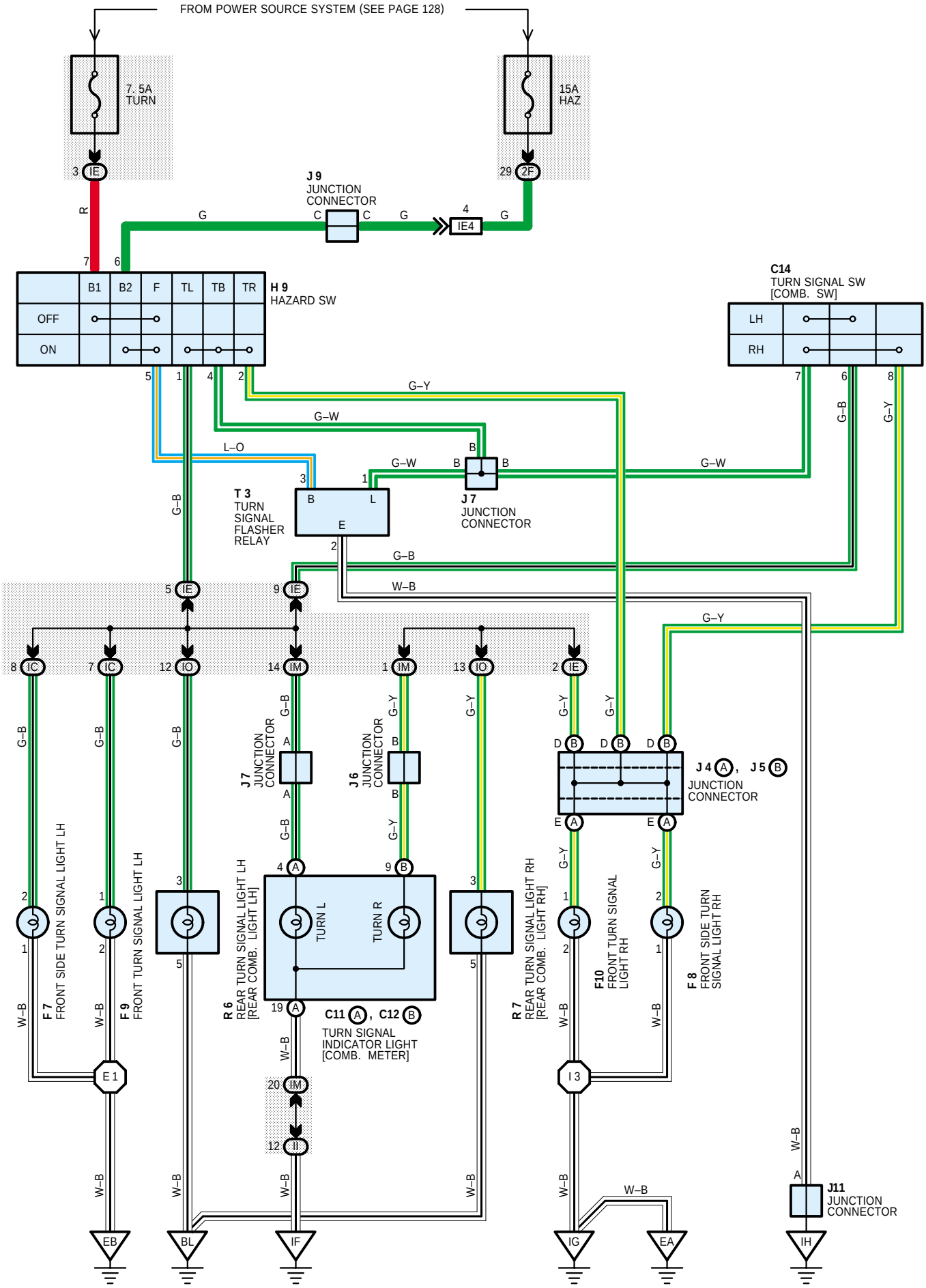# TURN SIGNAL AND HAZARD WARNING LIGHT (AUSTRALIA)